M-12746	1

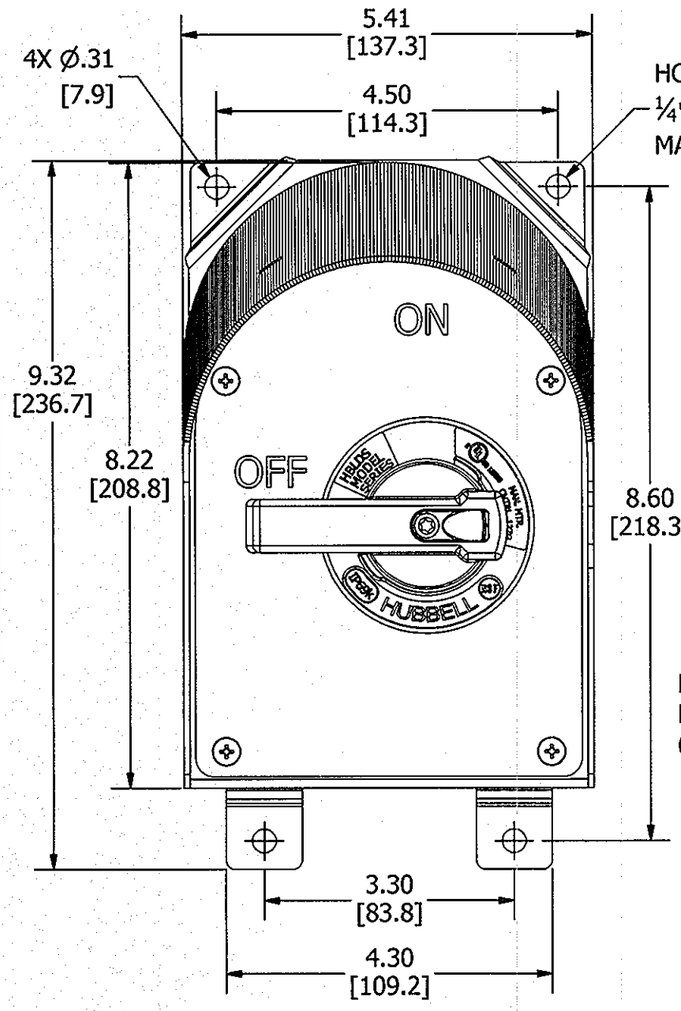

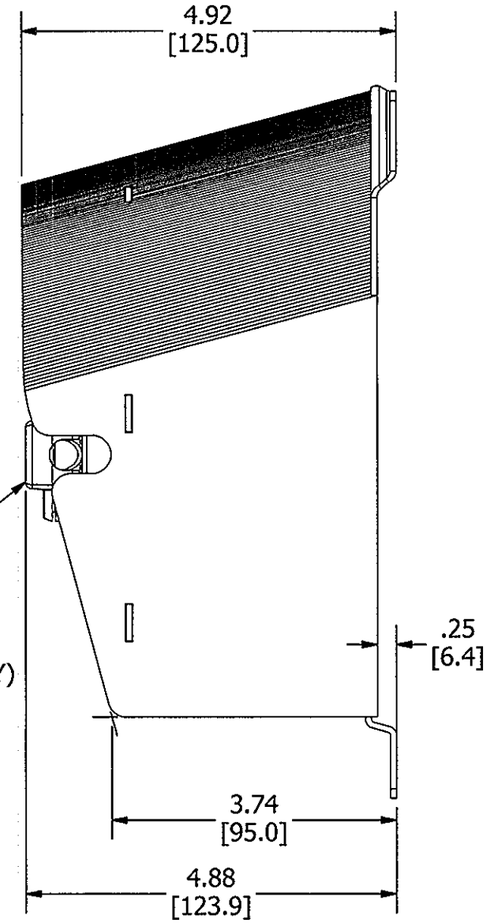

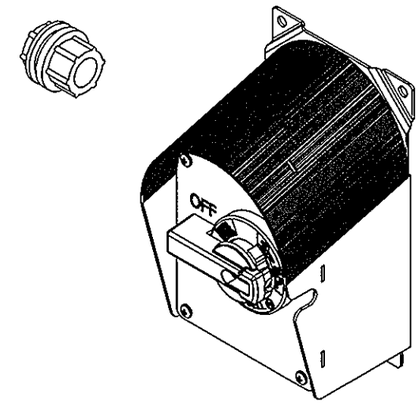

30A 600V A.C. RATINGS	
HP	VOLTAGE
1 HP	120V AC 1Ø
3 HP	200-240V AC 1Ø
5 HP	480V AC 1Ø
7.5 HP	200-240V AC 3Ø
15 HP	480V AC 3Ø
15 HP	600V AC 3Ø

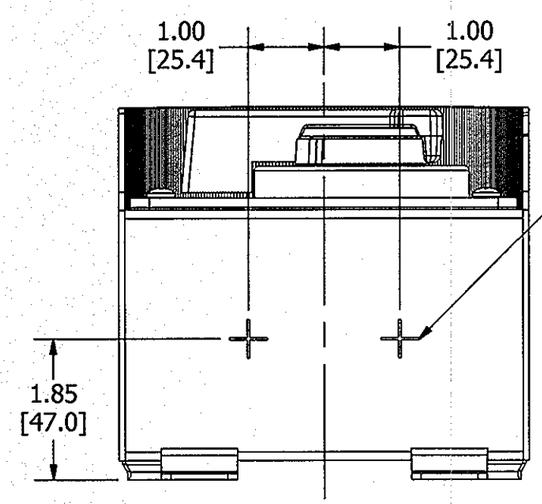

DRILL SPOTS FOR ¾" NPT CONDUIT FITTING, BOTTOM FEED ONLY.
INSTALLER TO DRILL OR PUNCH
Ø1.11 INCH (Ø28.2 mm) HOLE FOR CONDUIT FITTING.

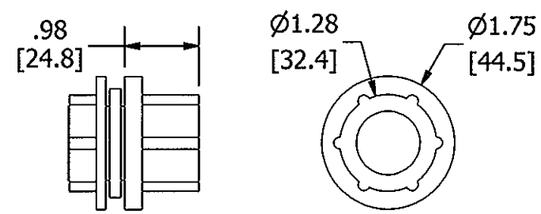

¾ INCH NPT CONDUIT FITTING, (1) INCLUDED.

NOTES UNLESS OTHERWISE SPECIFIED:
1. CATALOG NUMBERS: HBLDS3SSR, HBLDS3SSRAC, & HBLDS3SSRVFD.
2. DIMENSIONS SHOWN ARE IN INCHES [mm].
3. ENCLOSURE TYPE 4X, IP69k & 12.
4. cULus LISTED.

LIST OF PARTS

DESCRIPTION	MATERIAL	FINISH
ENCLOSURE & HARDWARE	STAINLESS STEEL	
HANDLE & MOUNT	PBT	
GASKET	EPDM FOAM	
CONDUIT HUB	ZINC	

DIMENSION SHEET FOR CAT. NO.
SEE NOTES

REPAIRABLE ☐
NON-REPAIRABLE ☒

SYM	DESCRIPTION	APPROVED	DATE
1	RELEASED PER DCN# 20826 RGP TLS RGP	TLS	10/07/14

THE DESIGN AND DIMENSIONS OF THE PRODUCT SHOWN ON THIS DRAWING ARE SUBJECT TO CHANGE WITHOUT NOTICE

TITLE
CIRCUIT-LOCK™ 30 AMP SLOPED TOP STAINLESS STEEL DISCONNECT SWITCH

TOLERANCES UNLESS OTHERWISE SPECIFIED
FRACTIONS ± 1/64
DECIMALS ± .030
ANGLES ± 2°

WIRING DEVICE-KELLEMS
HUBBELL INCORPORATED
SHELTON, CT

DR. BY	RGP	APP. BY	TLS
TR. BY		SCALE	NONE
CHK'D BY	TLS	DATE	10/21/2014

B
M-12746
1

CODE 74545