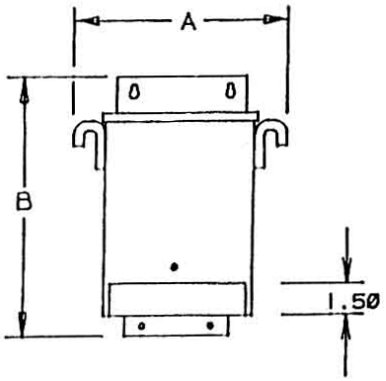

FRONT

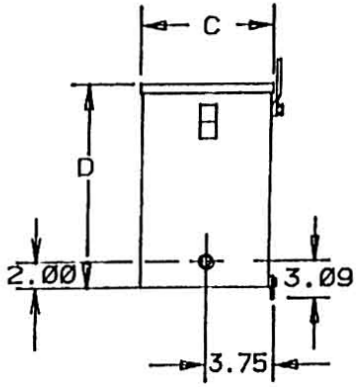

SIDE

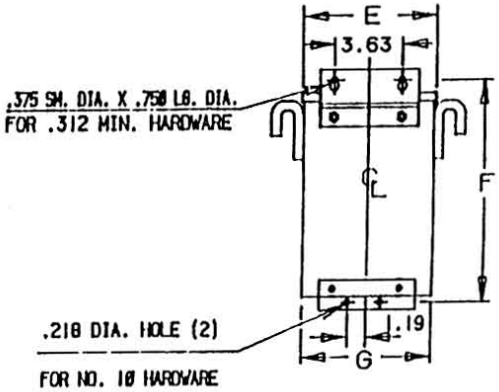

BACK

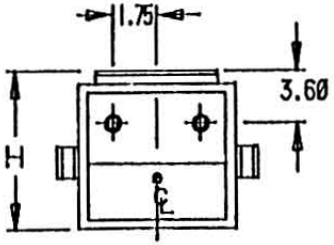

BOTTOM

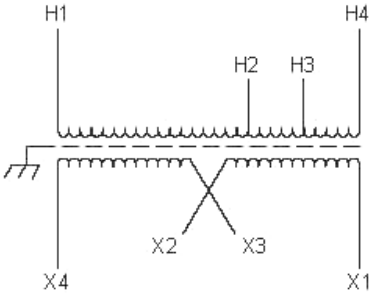

Primary Volts	Connect Primary Lines To	Inter-Connect	Connect Secondary Lines To
600	H1-H4		
570	H1-H3		
540	H1-H2		
Secondary Volts			
240		X2 to X3	X1-X4
120/240		X2 to X3	X1-X2-X4
120		X1 to X3 X2 to X4	X1-X4

KVA	CATALOG NUMBER	VOLTAGE		WIRING DIAGRAM	WEIGHT	PHASE	FREQ.
		HIGH	LOW				
5.0	**T-2-53114-1S**	600	120/240		75 Lbs	1ϕ	60 Hz

TYPICAL PERFORMANCE DATA

Winding Rise	115°C
Insulation	180°C
Sound Level	40 dB

Regulation @ 100% PF	

IMPEDANCE	

Typical Efficiency	
Full Load Losses	
No Load Losses	

Enclosure: NEMA-3R

A	B	C	D	E	F	G	H		
10.31	15.63	6.65	13.06	7.81	14.38	7.68	7.13		

Revisions

ACME ELECTRIC

Type No.

					A	PRINTS TO	CONTROL 7