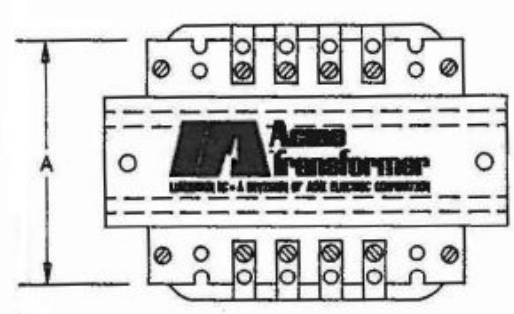

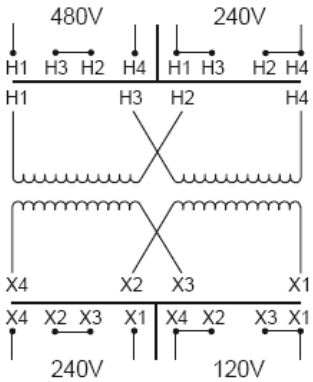

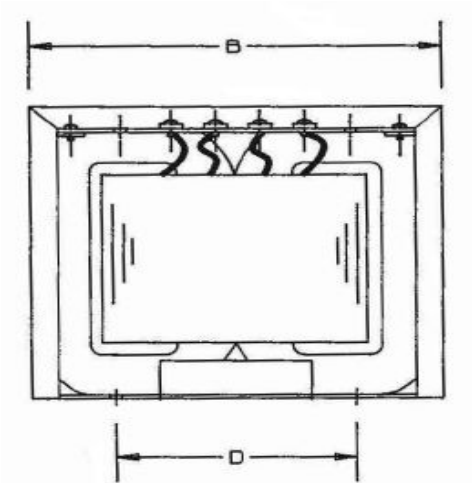

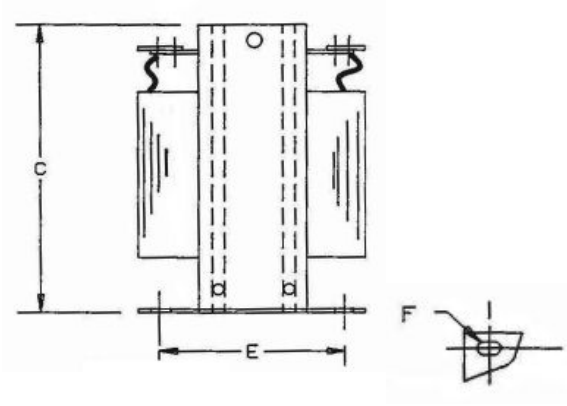

VA	CATALOG NUMBER	VOLTAGE		WIRING DIAGRAM	WEIGHT	PHASE	FREQ.
		HIGH	LOW				
3000	**TA-83223**	240 x 480	120/240		51 Lbs	1ϕ	60 Hz

TYPICAL PERFORMANCE DATA

Winding Rise:	80°C
Insulation:	130°C
Windings:	CU

Standards:	UL/CSA

Markings:	

Typical Efficiency:	
Full Load Losses	
No Load Losses	

Industrial Control Transformer

A	B	C	D	E	F				
7.00	7.50	7.66	6.50	5.55	.41 x .81				

					A	PRINTS TO	CONTROL 7

Revisions

ACME ELECTRIC

Type No.

Date: July 12, 2010