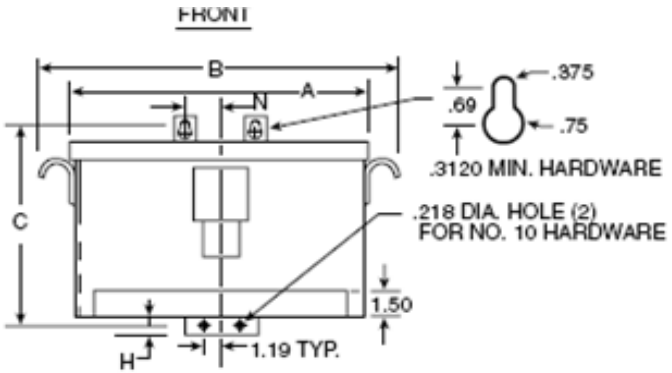

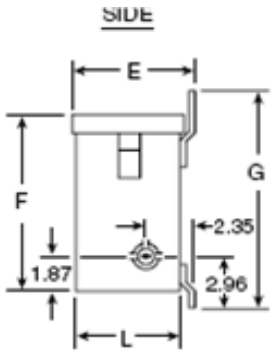

Primary Volts	%	Connect Leads to Tap No.
483	105	1
460	100	2
437	95	3
Secondary Volts		
230		X1, X2, X3
133 1 phase		X1 & X0 X2 & X0 X3 & X0

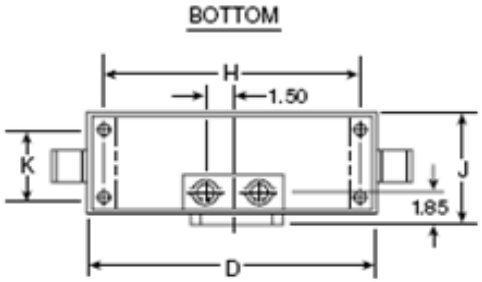

CERTIFIED DIMENSIONS
THREE PHASE
TOTALLY ENCLOSED

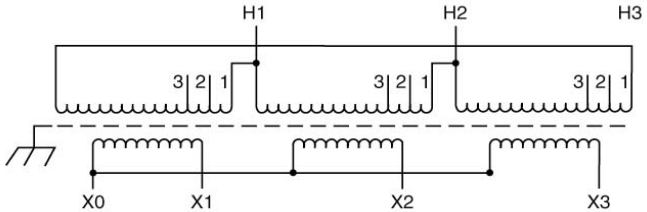

KVA	CATALOG NUMBER	VOLTAGE		TYPE	WEIGHT	PHASE	FREQ.
		HIGH	LOW				
7.5	**DTGA-7-2S**	460Δ	230Y/133	NEMA 3R	180 Lbs	3ϕ	60 Hz

TYPICAL PERFORMANCE DATA

Winding Rise	115°C
Insulation	180°C
Sound Level	40 dB

Regulation @ 100% PF	

IMPEDANCE	

Typical Efficiency	
Full Load Losses	
No Load Losses	

A	B	C	D	E	F	G	H	J	K	L	M	N	P	R
16.87	19.25	14.46	16.72	7.37	13.06	15.21	.38	7.31		6.87		3.25		

Revisions

ACME ELECTRIC

Type No.

DATE: 4-28-09

					A	PRINTS TO	CONTROL 7