M-12351 2

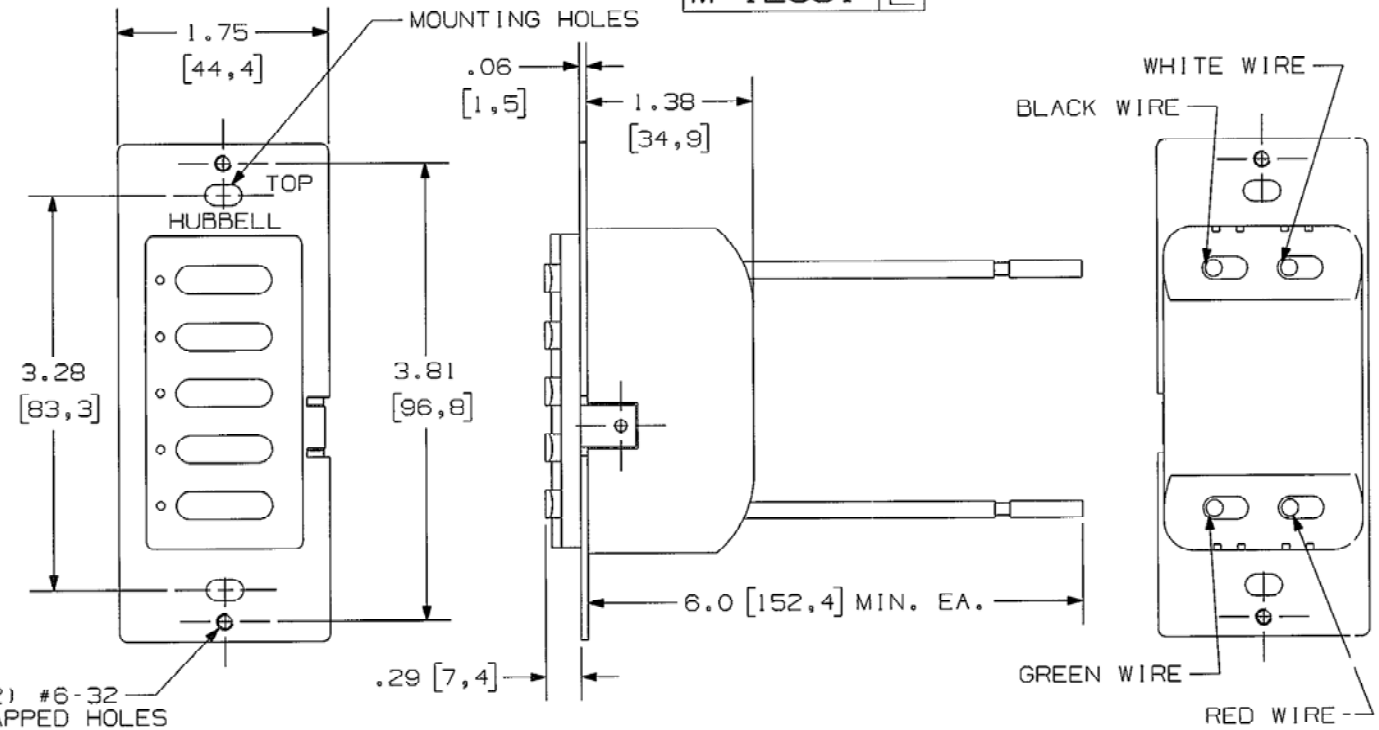

CATALOG NO.	DESCRIPTION	COLOR	INTERVALS
DT5030LA	TIMER, 30 MIN, 8.3A 120/277V	LIGHT ALMOND	30,15,10,5 MIN. AND OFF
DT5030I	TIMER, 30 MIN, 8.3A 120/277V	IVORY	30,15,10,5 MIN. AND OFF
DT5030W	TIMER, 30 MIN, 8.3A 120/277V	WHITE	30,15,10,5 MIN. AND OFF
DT5060LA	TIMER, 60 MIN, 8.3A 120/277V	LIGHT ALMOND	60,30,20,10 MIN. AND OFF
DT5060I	TIMER, 60 MIN, 8.3A 120/277V	IVORY	60,30,20,10 MIN. AND OFF
DT5060W	TIMER, 60 MIN, 8.3A 120/277V	WHITE	60,30,20,10 MIN. AND OFF
DT5012LA	TIMER, 12 HR., 8.3A 120/277V	LIGHT ALMOND	12,8,4,2 HRS. AND OFF
DT5012I	TIMER, 12 HR., 8.3A 120/277V	IVORY	12,8,4,2 HRS. AND OFF
DT5012W	TIMER, 12 HR., 8.3A 120/277V	WHITE	12.8.4.2 HRS. AND OFF
DT5512LA	TIMER, 12 HR., SWITCH, 24V	LIGHT ALMOND	12,8,4,2 HRS. AND OFF
DT5512I	TIMER, 12 HR., SWITCH, 24V	IVORY	12,8,4,2 HRS. AND OFF
DT5512W	TIMER, 12 HR., SWITCH, 24V	WHITE	12.8.4.2 HRS. AND OFF

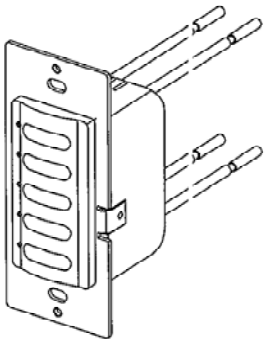

NOT TO SCALE

NOTES:
1) ALL DIMENSIONS ARE IN INCHES AND [MILLIMETERS]
2) ALL WIRES #14AWG

CODE 74515

LIST OF PARTS

DESCRIPTION	MATERIAL	FINISH
MOUNTING BRACKET	ALUMINUM	CLEAR
BODY	POLYCARB.	SEE CHART
WIRES	COPPER	---

DIMENSION SHEET FOR CAT. NO. SEE CHART

REPAIRABLE ☐ NON-REPAIRABLE ☒

SYM	REVISIONS	APP	DATE
2	ADDED COLUMN "INTERVALS" AND SPECS TO TABLE. PER DCN 19692 DDL	SL	03/19/13
1	RELEASED PER DCN19177		10/26/12

THE DESIGN AND DIMENSIONS OF THE PRODUCT SHOWN ON THIS DRAWING ARE SUBJECT TO CHANGE WITHOUT NOTICE

TITLE
TIMER

TOLERANCES UNLESS OTHERWISE SPECIFIED
.XX = ±.01
.XXX = ±.005
ANGLES = ±2°

WIRING DEVICE-KELLEMS
HUBBELL INCORPORATED
SHELTON, CT

DR. BY SRE | APP. BY
TR. BY | SCALE 1:1
CHK. BY | DATE 10/26/12

B M-12351 2