M-12923 | 1

CATALOG NUMBER	BODY COLOR	GOTCHA RING COLOR CODE	NPT HUB SIZE	CORD DIA. RANGE	*A ACROSS CORNERS	*A ACROSS FLATS	(B) [4]	C	ØD (THROAT DIA.)	*E ACROSS CORNERS	*E ACROSS FLATS
SHC1035SS	STAINLESS STEEL	BLUE	3/4"	.38-.50 [9.5-12.7]	1.59 [40.4]	1.38 [35.1]	1.30 [33.0]	.56 [14.2]	.81 [20.6]	1.44 [36.6]	1.25 [31.7]
SHC1036SS	STAINLESS STEEL	BROWN	3/4"	.50-.63 [12.7-15.9]	1.59 [40.4]	1.38 [35.1]	1.30 [33.0]	.56 [14.2]	.81 [20.6]	1.44 [36.6]	1.25 [31.7]
SHC1037SS	STAINLESS STEEL	YELLOW	3/4"	.63-.75 [15.9-19.0]	1.59 [40.4]	1.38 [35.1]	1.30 [33.0]	.56 [14.2]	.81 [20.6]	1.44 [36.6]	1.25 [31.7]
SHC1038SS	STAINLESS STEEL	ORCHID	3/4"	.75-.88 [19.0-22.2]	1.59 [40.4]	1.38 [35.1]	1.30 [33.0]	.56 [14.2]	.81 [20.6]	1.44 [36.6]	1.25 [31.7]

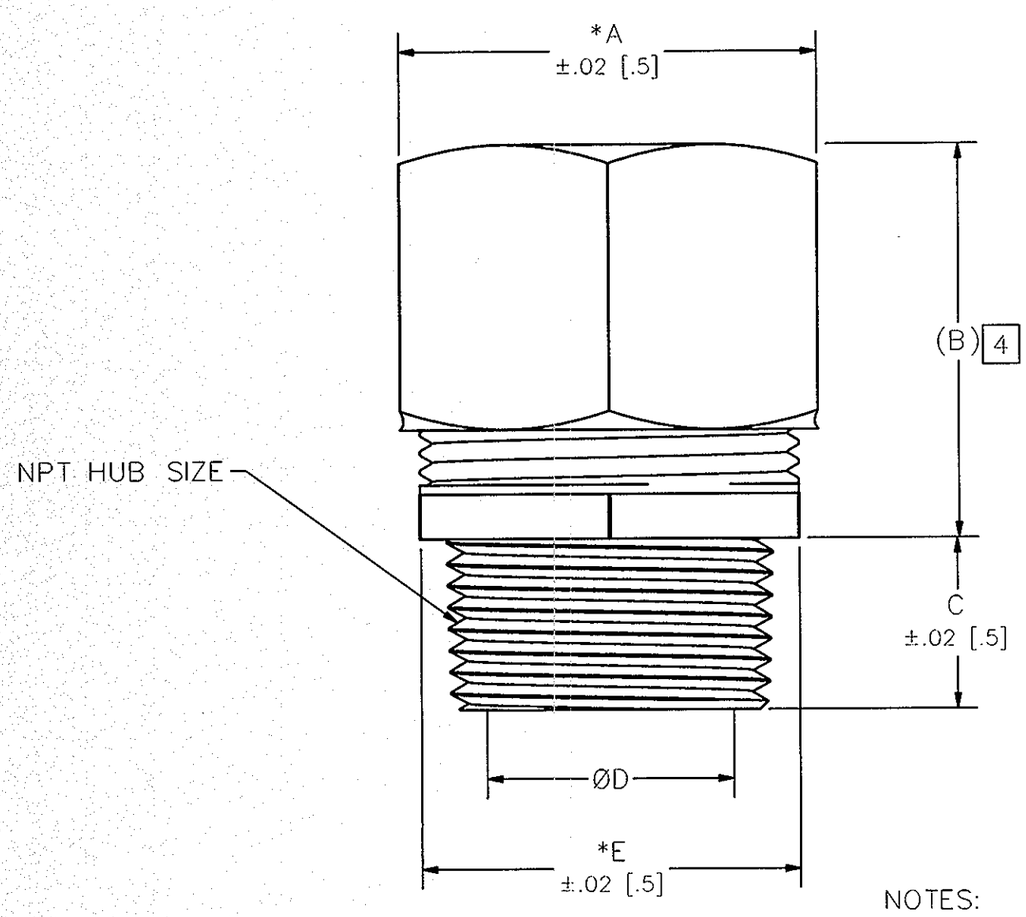

NOTES:

1. DIMENSIONS ARE IN INCHES [MM].
2. LOCKNUT PURCHASED SEPARATELY.
3. BUSHING COATED WITH AMBER PETROLEUM JELLY.

[4] REFERENCE ONLY, DIMENSION MAY VARY.

LIST OF PARTS

DESCRIPTION	MATERIAL	FINISH
CORD CONN. BODY, MALE	SST	
NUT	SST	
GOTCHA RING	NYLON	SEE TABLE
BUSHING	BLACK NEOPRENE	SEE NOTE 3

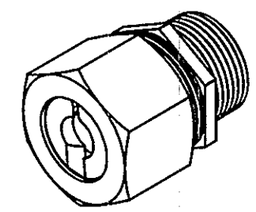

CATALOG NO. SHC1035SS
(NOT SHOWN TO SCALE)

REV	DESCRIPTION	APP	DATE
1	INITIAL RELEASE PER DCN 21189	DDL PJB	05/06/15

THE DESIGN AND DIMENSIONS OF THE PRODUCT SHOWN ON THIS DRAWING ARE SUBJECT TO CHANGE WITHOUT NOTICE

TITLE
STARIGHT STAINLESS STEEL CORD CONNECTOR FORM 3

TOLERANCES UNLESS OTHERWISE SPECIFIED
.XX = ± .01
.XXX = ± .005
ANGLES = ± 2°

WIRING DEVICE-KELLEMS HUBBELL INCORPORATED SHELTON, CT

DR. BY	SR	APP. BY	
TR. BY		SCALE	2:1
CHK. BY	DDL	DATE	05/06/15

DIMENSION SHEET FOR CAT. NO. **SEE TABLE**

REPAIRABLE ☐ NON-REPAIRABLE ☐

B

M-12923

1

CODE 74545